TEKNOFEST

AEROSPACE AND TECHNOLOGY FESTIVAL

MART TRANPORTATION COMPETETION

PROJECT DETAIL REPORT

PROJECT CATEGORY: Smart Transportation Competition

PROJECT NAME: Electricity Production Through Acoustics Using Transducer

TEAM NAME: Zodiacal lights

TEAM ID: T3-22531-202

TEAM LEVEL: Junior (Primary) School**.**

TEAM MEMBERS: NABA NAEEM /HANIA AZEEM

ADVISOR NAME: AMINA AAMIR

Project Detail Report

1. Project Summary

— In this work, a relatively less explored source of green energy is proposed. Random sound energy around us can be treated as a source of electric power after their efficient conversion using suitable transducer. An effective way of producing usable electric power from available random sound energy is presented here. Piezoelectric transducers are used for conversion of sounds into electric energy. The produced electric energy from multiple piezoelectric transducers are stored in multiple supercapacitors which are then summed up and amplified through adder and voltage multiplier circuits. The resultant electric power was used to charge a rechargeable DC battery so as to store this energy. A small 9 volt DC battery was found to be fully recharged within half an hour from fully discharged stage using medium sound source through the proposed conversion circuit. In this way, random sound energy from numerous sources around us can be stored as electric energy which can be used later to deliver electric power to drive compatible small loads. The proposed idea can give a new source of green energy and can contribute in global search for renewable energy

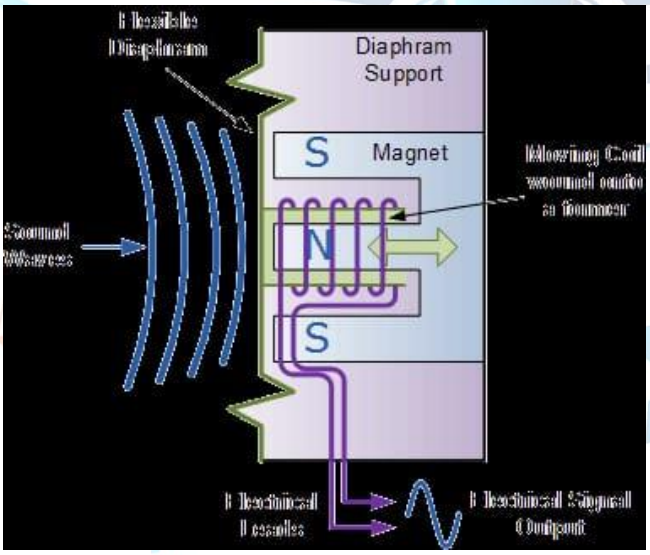

2. Problem/ Issue:

Scientists are desperately searching for renewable andgreen sources of energy to produce electric power. Till now, fuel is serving as the main source of electric power. Fuel combustion produces heat which in turn produces electricity through an electro-mechanical process. Minerals like coal, gas, diesel and uranium are commonly used as fuels as per fuel combustion chamber. These mineral sources are limited in earth and hence these sources are decreasing day by day because of using it extensively. So, searching is on for renewable sources of electric power that can meet the demand of future.

3. **Solution**

A number of piezoelectric transducers collected from acoustic-electric guitars are used for conversion of sounds into electric energy. As these types of piezoelectric transducers are small enough the produced voltage across the transducer using medium range of sound is also very small. In this experiment, a small buzzer was used as sound source which was operated by a 6 Volt, 2 KHz . The resultant buzzer sound produces around 200 mV across the ransducer. As this generated voltage is in ac form and noisy in a nature so a 1 farad supercapacitor is used in parallel to a piezoelectric transducers for both filtering and storing

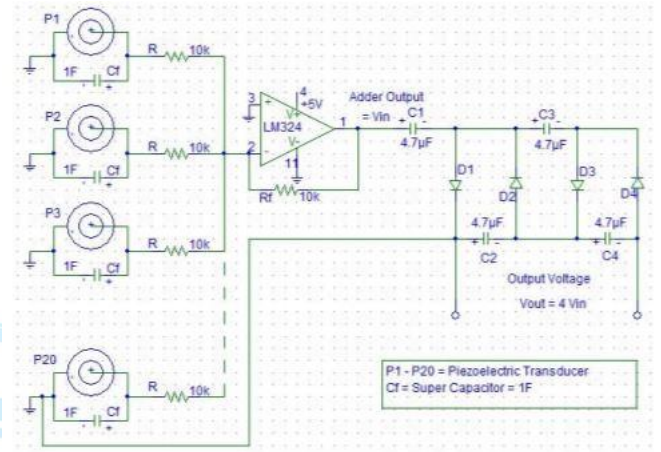

the produced electricity energy, as shown in Fig. 1 The Supercapacitor also known as

4. **Method**

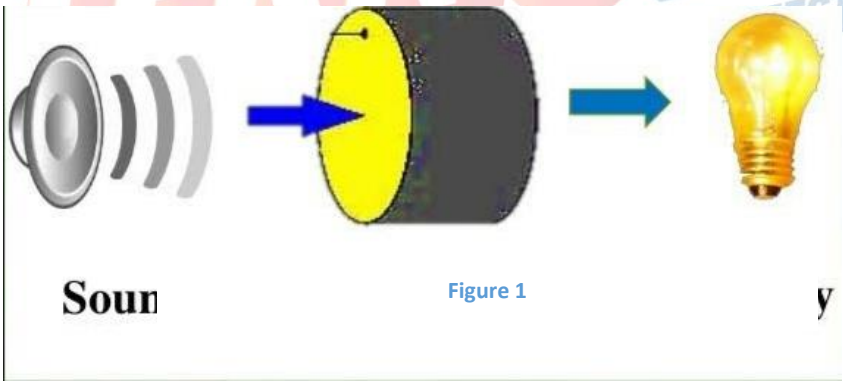

Figure 1

In our proposed method, at first, sound energy generated from buzzer was used to produce small electric energy at the terminal of piezoelectric transducer. A 1 farad supercapacitor of 5.5 volt is placed in parallel to the terminal of piezoelectric transducer to store this small energy. A number of this transducer-supercapacitor parallel set up was constructed and their output voltages were added using a LM 324 Op Amp adder circuit, as shown in Fig. 2. Measured output voltage for 20 transducers-supercapacitors parallel set up was found to be

around 4 volt which was solely the result from sound energy, More transducers-supercapacitors parallel set up could be used but in that case the added output will excced the highest saturation voltage of LM 324 Op Amp, as defined by the biasing voltage Vcc = 5 V that we applied in our experiment. The output of the adder circuit was then fed to the input of a voltage multiplier (here, Quadrupler) circuit in order to increase the produced voltage level. The resultant voltage at the output of the Quadrupler circuit was measured to be around 12 volt which can now be used to charge a suitable rechargeable DC battery, Here, a small 9 volt DC rechargeable battery was used as a test case. It was observed that the battery got fully recharged within half an hour from fully discharged stage through the proposed conversation circuit using only the buzzer sound. It was also observed that the Quadrupler output voltage varies with the frequency of the ac signal used to operate the buzzer. This is not surprising as piezoelectric materials are frequency sensitive and maintain a frequency range for their smooth operation. The complete circuit set up is shown in Fig. 1. The overall conversion process can be summerized in the blockdiagram shown in Fig. 2.

Higher output voltage can be achieved at the output of adder by increasing the number of transducers-supercapacitors parallel stages before adder circuit if the biasing voltage of LM 324 Op Amp is increased accordingly. The purpose of using a diode in the direction of Quadrupler to rechargeable battery in the circuit is to prevent the discharging of the battery when there is not enough sound. In the absence of no sound or low level sound, output of the Quadrupler circuit will be below 9 V and the battery will try to discharge by flowing current in reverese direction assuming the Quadrupler circuit as a load. The diode is placed to stop

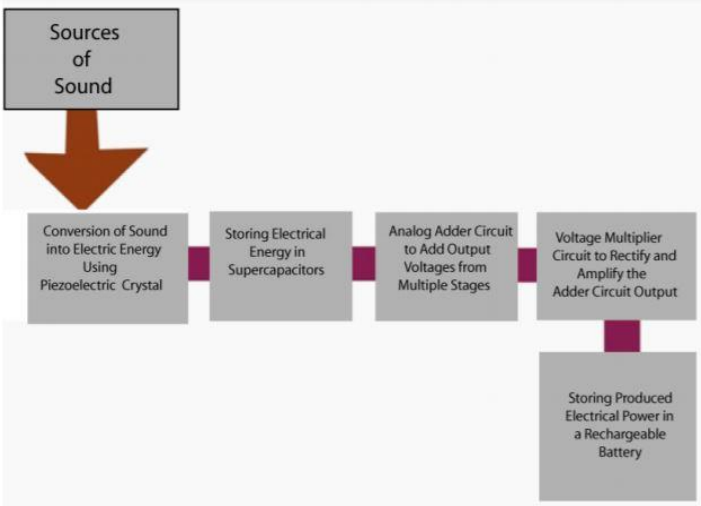

Figure 2

this reverse flow of current from battery so that it only take charge from the Quadrupler circuit and cannot get discharged in the absence of sufficient sound. The conversion circuit shown in Fig. 1 was also tested in outdoor environment to measure its performance. Tested sound sources were train whistle in railway station, sound produced from a runnnig hydraulic

pump and sound produced from construction piling. These typical high sound sources around us usually play no role except producing noises for us. It has been observed that, battery can be charged from piling sound at a distance of 5 inch from the machine beyond which output of the Quadrupler drops below 9 volt, thus stopping the charging of battery. In case of hydraulic pump, battery can take charge if the circuit is placed within 10 inch from the machine. The best performance was observed in rail station where battery can take charge from sound energy of whistle of the train, even if the circuit is kept at 100 inch distant from the train. Table I shows the recorded data of Quadrupler output voltages for these three different sound sources measured at various distances ranging from 2 inch to 100 inch from the sound sources. The result says that the proposed set up can be placed in any such places within the prescribed distances from the sound source. The set up will produce usable amount of electrical power that can charge a small rechargeable battery to operate any small battery driven apparatus

5. **Innovative Aspect**

According to available technology and skills the project has delivered its milestone as promised as the traffic signal, production area in industrial area, devices gadgets produce sound which is most likely to be considered as noise can be converted into electrical energy to charge these device without even charing it separately. Similarly in industrial area where there are abound heavy machinery which produce a lot of nosie, that noise could be useable to chare batteries, so this energy is useful for running other low powered devices.

6. **Applicability**

The project can be asily converted into a product if it becomes compact as it could be placed at traffic signals where there is a lot of noise in the form of sound when this would convert in the form of electrical energy which is good to light street lights and road lane lights. Moreover the stret lights as well as road lights almost use 8% of total production so this could be of revolutionary part for them.

7. **Estimated cost and Project Scheduling**

Equipment	Cost
Piezoelectric Crystal(5)	2 $
SuperCapacitor	8 $
Analogue Adder Circuit	3 $
Voltage Multiplyer Circuit	7 $
Battery 9V	2 $
QuadRupler	14 $
	=34 $

The project minimum cost will be 34 $ with features of charging a 9V battery wihin half an hour but if the transducers of high quality and quantity are used then it cost would go higher just by 7 $r.

All the expenditure should be made before the project begin.

There are as such no projects in a market, because none of has presented it as a product that could be lucrative.

Period	Functionality	Progress
2 days	Components Testing	20%
2 days	Components Assembling	50%
2 days	Getting the outputs	55%
3 days	Adding redundancy by replacing components	60%
2 days	Retrieving Data	80%
1 day	Testing Project	95%
3 days	Finalizing the Device	100%
= Total days (15 days)		

8. **Target Group of the Project Idea (Users):**

The target group or it is more precise to say that the target place for this idea is where there is a sound/noise pollution, as especially sound energy is abound at traffic signals, industrial areas, near Wind turbines and device or machines which produce sound which is more likely to be called as noise.

9. **Risks**

In fact, there is no risk associated with this project, but the proposed method opens the door of a relatively less explored source of green energy, as there is no every place where it is substantial sound energy to produce electricity.

10. Project Team

Name Surname	Mission In The Project	School	Project or problem related experience
NABA NAEEM	Team Leader/ Programming & Presentation	Pak-Turk Maarif International Schools &Colleges Lahore Pakistan	Class 4 Student Participated in Inter School Sience Exhibition
HANIA AZEEM	Assemblage& Execution	Pak-Turk Maarif International Schools &Colleges LahorPakistan	Class 4 Student Participated in Inter School Sience Exhibition

11. **Resources**

[1] A. Zahedi, “Solar photovoltaic (PV) energy; latest developments in the building integrated and hybrid PV systems”, Renewable Energy, Elsevier, Volume 31, Issue 5, Pages 711–718, April 2006.

[2] David Ginley, Martin A. Green and Reuben Collins. “Solar Energy Conversion Toward 1 Terawatt”, MRS Bulletin, 33, pp 355-364, 2008.

[3] Tony Burton, Nick Jenkins, David Sharpe, Ervin Bossanyi, “Wind Energy Handbook”, John Wiley & Sons- Technology & Engineering, May 2011.

[4] Robert John Littrell, “High Performance Piezoelectric MEMS Microphones”, Dissertation of Doctor of Philosophy (Mechanical Engineering), The University of Michigan, 2010.

[5] Takeuchi M, Matsuzawa S, Tairaku K, Takatsu C. Piezoelectric generator as power supply for RFID-tags and applications, Proc. IEEE Ultrasonics Symposium, New York City, USA, pp. 2558–2561, 28–31 October 2007.

[6] T. Dikshit, D. Shrivastava, A. Gorey, A. Gupta, P. Parandka, S. Katiyal, “Energy Harvesting via Piezoelectricity” , proceedings of the 4th National Conference; INDIACom-2010, 25 – 26 February, 2010.

[7] Roundy S., Wright P. K. and Rabaye J., "A. study of low level vibrations as a power source for wireless sensor nodes", Computer Communications 26, pp. 1131–1144, 2003. [8] Richard, Michael Graham "Japan: Producing Electricity from Train Station Ticket Gates". TreeHugger. Discovery Communications, LLC. August 2006.